REVISION RECORD			
LTR	ECO NO:	APPROVED:	DATE:

Project : MT6735 REF_SCH TOP LEVEL

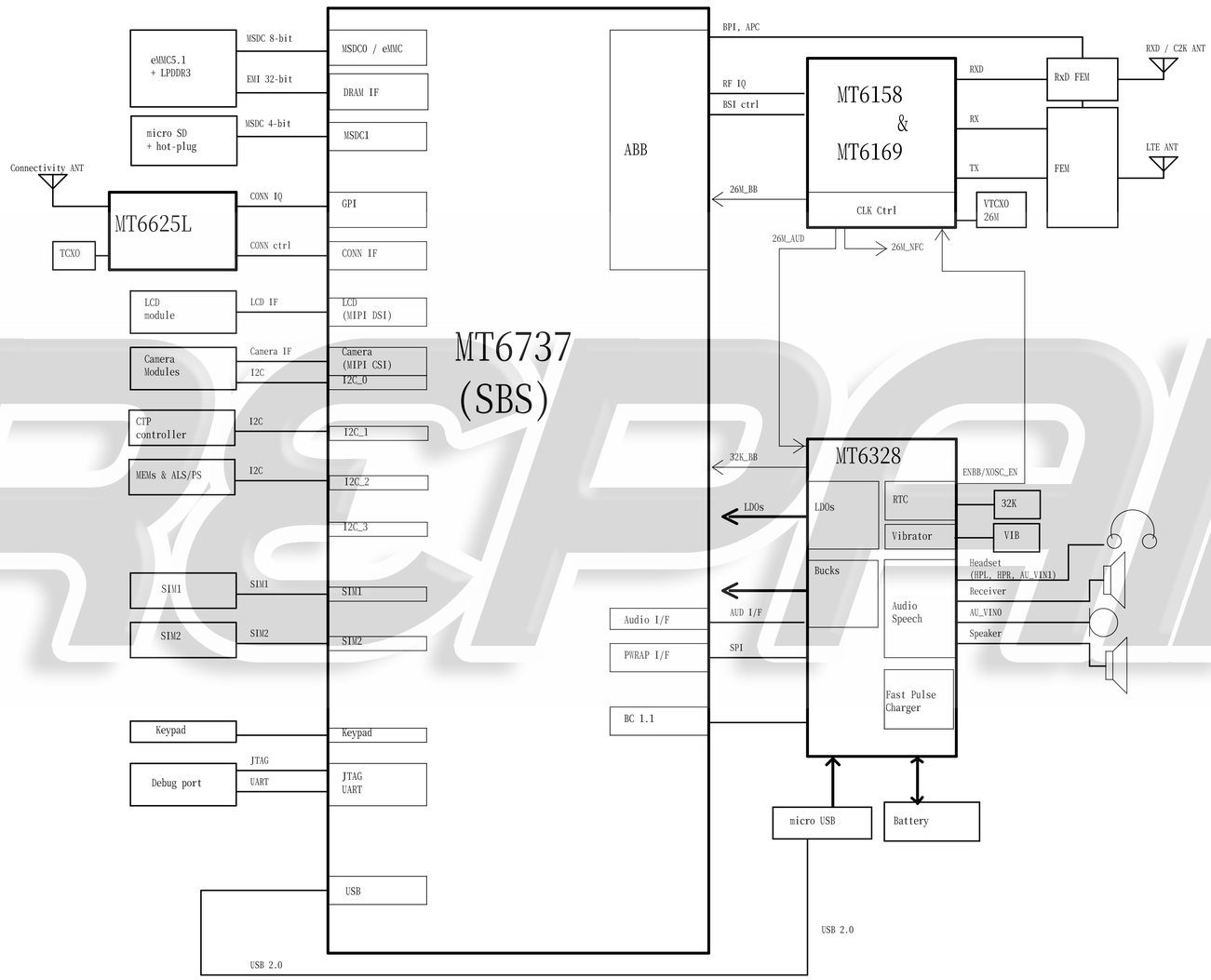

COMPANY: WIND			
TITLE: E187			
DRAWN: SUNHAO	DATED: 2016.01.21		
CHECKED: SUNHAO	DATED: <Checked Date>	CODE: <Code>	SIZE: D
QUALITY CONTROL: <QC By>	DATED: <QC Date>	DRAWING NO: <Drawing Number>	REV: <Revision>
RELEASED: <Released By>	DATED: <Release Date>	SCALE: <Scale>	SHEET: 1 OF 23

REVISION RECORD			
LTR	ECO NO:	APPROVED:	DATE:

I2C	Function	I2C Spec.	Budget Timing	I2C Slave Address (7-bit mode)
I2C-0	Rear Camera - 8M	400 Kbps	Yes.	Rear camera (IMX219) I2C address: 0X10 (Write:0x20, Read:0x21) AF driver (DW9719S) I2C address: 0x0C (Write:0x18 , Read:0x19)
	Front Camera	400 Kbps	Yes.	Front camera (S5K5E8) I2C address: 0x2D (Write:0x5A, Read:0x5B)
I2C-1	CTP	400 Kbps	Yes.	S3603 / CTP I2C address: 0X20 (Write:0x40, Read:0x41)
I2C-2				
	Accelerometer	400 Kbps		BMA253 / Accelerometer I2C address: 0x3B (Write:0x76, Read:0x77)
	ALS / PS Sensor	400 Kbps		MN66238TKDN / ALS+PS I2C address: 0X49 (Write:0x92, Read:0x93)
	NFC	1.2 Mbps	Yes.	
	Flashlight Driver	400 Kbps		
I2C-3				

Note : I2C Spec. : Standard mode (100 kbps) and Fast mode (400 kbps), Fast mode Plus (1 Mbps) and High-speed mode (3.4 Mbps)

IREPAIR

DRAWN: SUNHAO	DATED: 2016.01.21
CHECKED: SUNHAO	DATED: <Checked Date>
QUALITY CONTROL: <QC By>	DATED: <QC Date>
RELEASED: <Released By>	DATED: <Release Date>

COMPANY: WIND			
TITLE: E187			
CODE: <Code>	SIZE: D	DRAWING NO: <Drawing Number>	REV: <Revision>
SCALE: <Scale>		SHEET: 2 OF 23	

REVISION RECORD			
LTR	ECO NO:	APPROVED:	DATE:

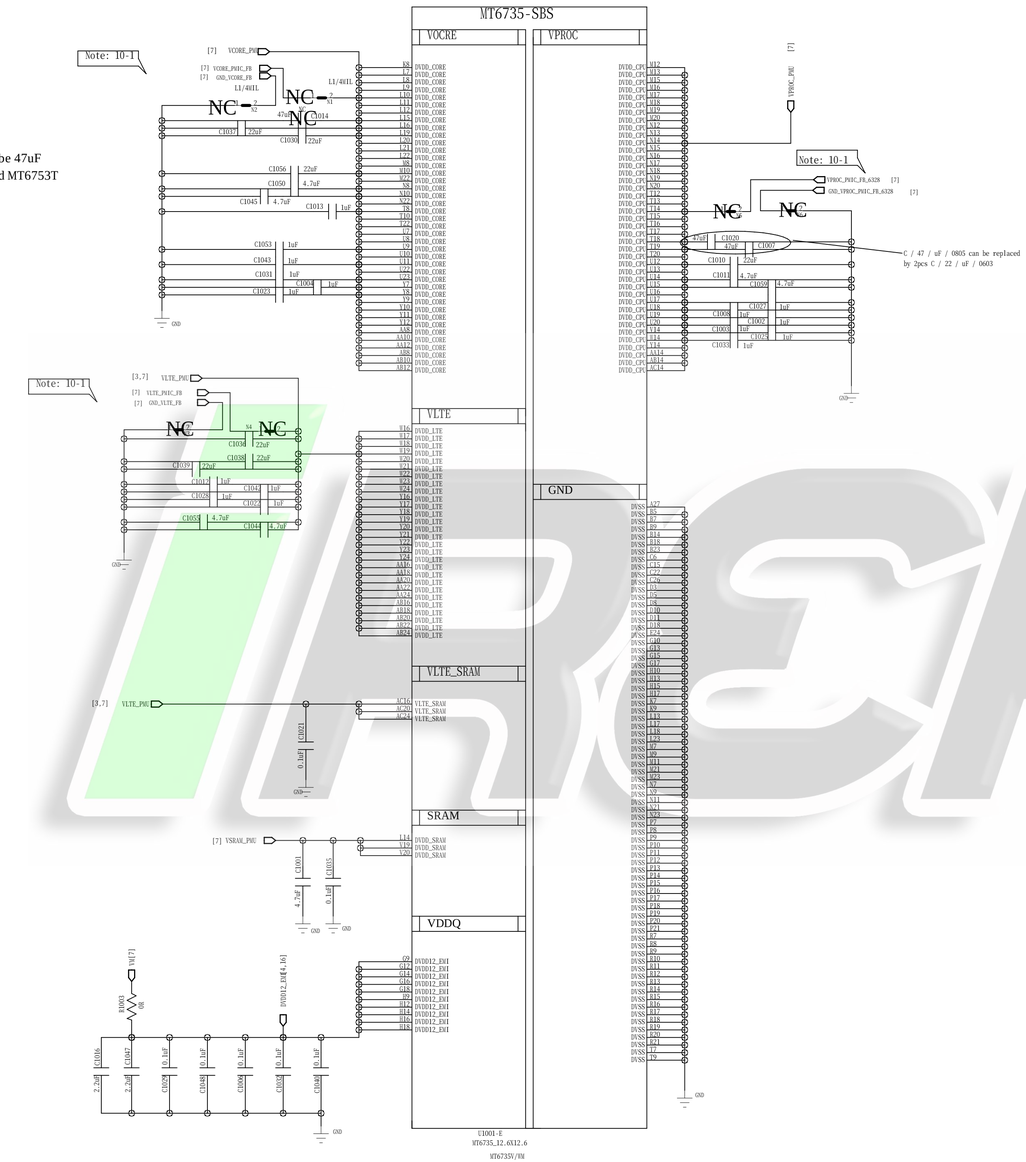

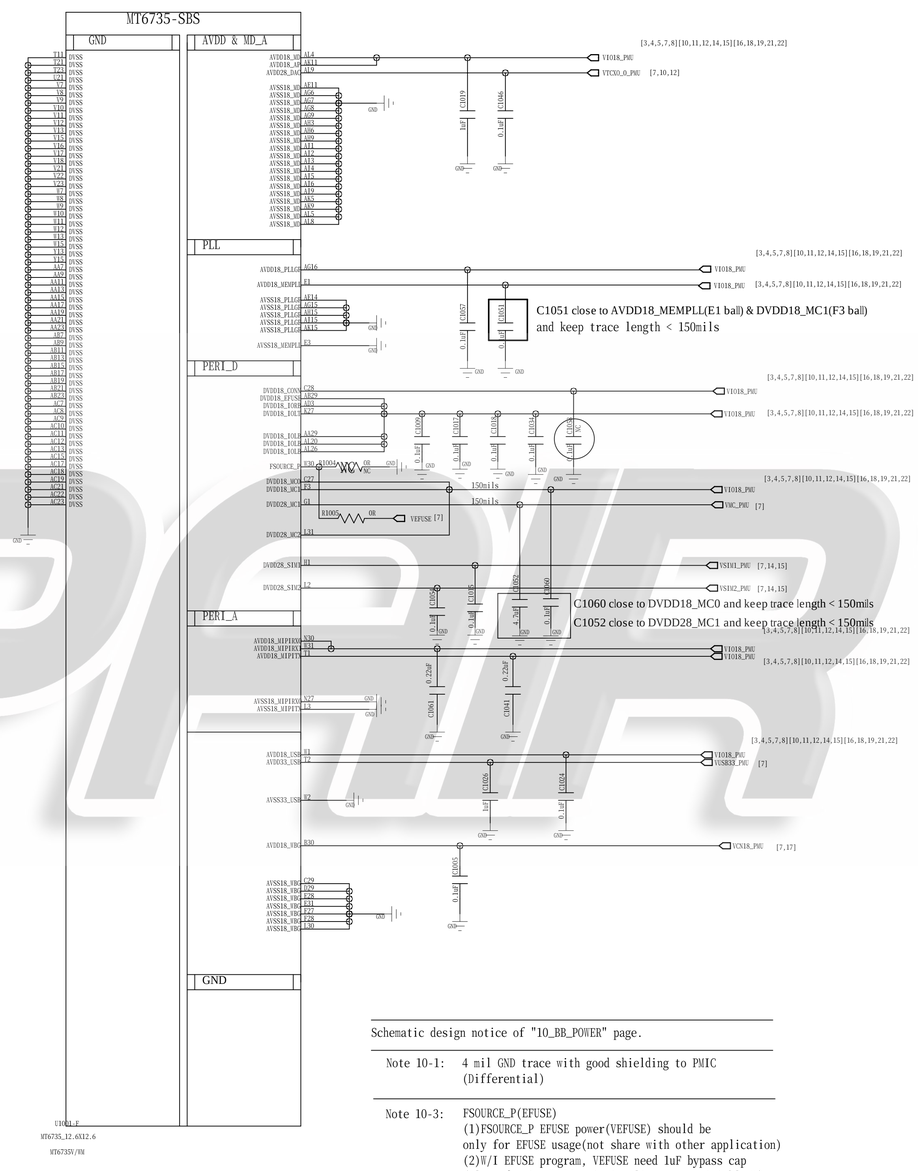

Schematic design notice of "10_BB_POWER" page.

Note 10-1: 4 mil GND trace with good shielding to PMIC (Differential)

Note 10-3: FSOURCE_P(EFUSE)
(1)FSOURCE_P EFUSE power(VEFUSE) should be only for EFUSE usage(not share with other application)
(2)W/I EFUSE program, VEFUSE need 1uF bypass cap (pls refer to "LDO output voltage/current table")
(3)W/O EFUSE program, VEFUSE bypass cap should be NC.

DRAWN: SUNHAO	DATED: 2016.01.21	COMPANY: WIND	
CHECKED:	DATED:	TITLE: E187	
QUALITY CONTROL:	DATED:	CODE: / SIZE: / DRAWING NO: / REV:	
RELEASED:	DATED:	SCALE:	SHEET: 3 OF 23

REVISION RECORD			
LTR	ECO NO:	APPROVED:	DATE:

DRAWN: SUNHAO	DATED: 2016.01.21	COMPANY: WIND	
CHECKED:	DATED:	TITLE: E187	
QUALITY CONTROL:	DATED:	CODE: / SIZE: / DRAWING NO: / REV:	
RELEASED:	DATED:	SCALE:	SHEET: 4 OF 23

REVISION RECORD			
LTR	ECO NO:	APPROVED:	DATE:

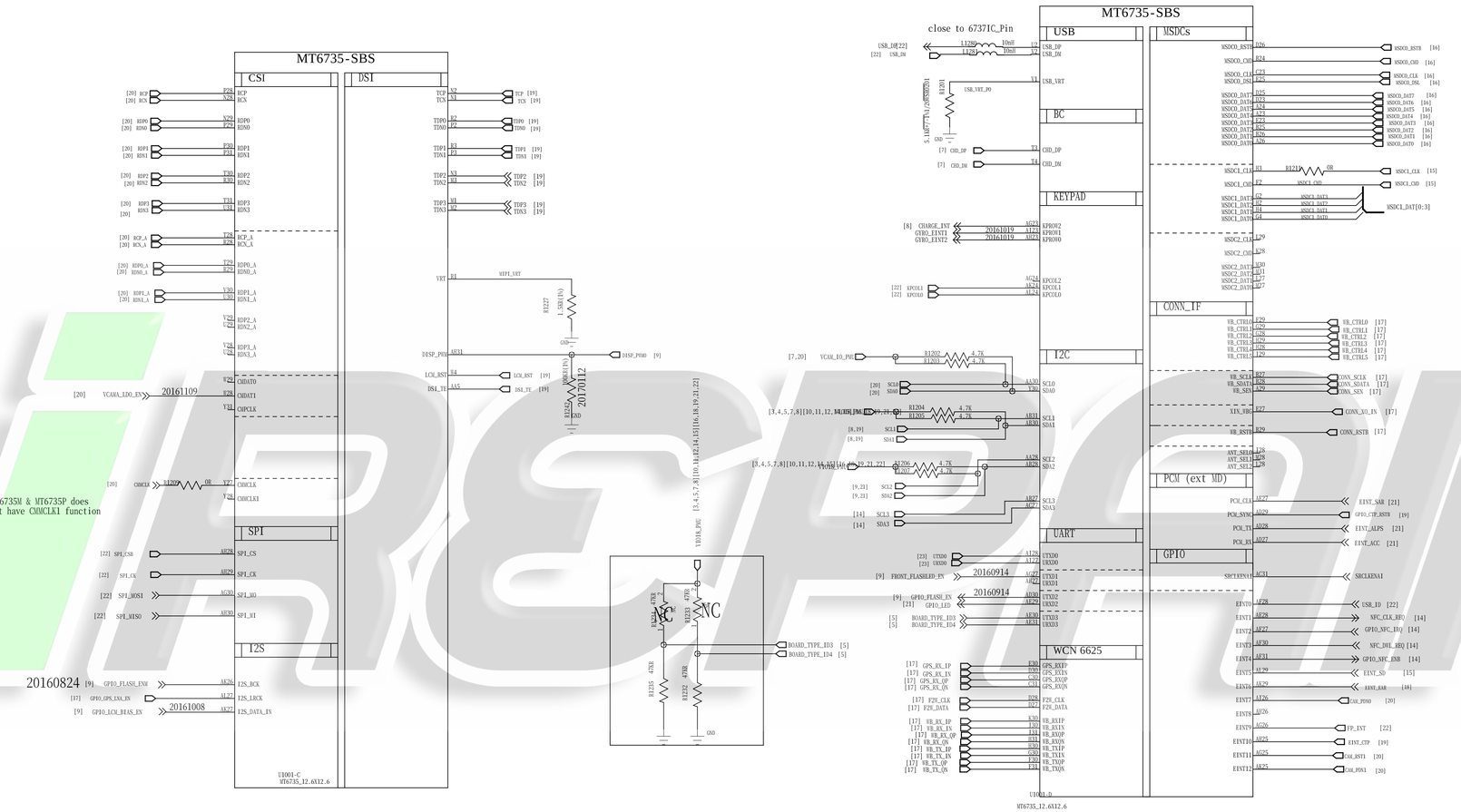

Schematic design notice of "12_BB_2" page.

Note 12-1: MSDC2 Pin should be NC (No Connection) for MT6735M

Note 12-2: MT6735M does Not have CMMCLK1 function

Please refer to MT6735M Design Notice for details

DRAWN: SUNHAO	DATED: 2016.01.21	COMPANY: WIND	
CHECKED:	DATED:	TITLE: E187	
QUALITY CONTROL:	DATED:	CODE:	SIZE: / DRAWING NO: / REV:
RELEASED:	DATED:	SCALE:	SHEET: 5 OF 23

REVISION RECORD			
LTR	ECO NO:	APPROVED:	DATE:

iREPAIR

DRAWN: SUNHAO	DATED: 2016.01.21	COMPANY: WIND			
		TITLE: E187			
CHECKED:	DATED:	CODE:	SIZE:	DRAWING NO:	REV:
QUALITY CONTROL:	DATED:				
RELEASED:	DATED:	SCALE:		SHEET: 6 OF 23	

REVISION RECORD			
LTR	ECO NO:	APPROVED:	DATE:

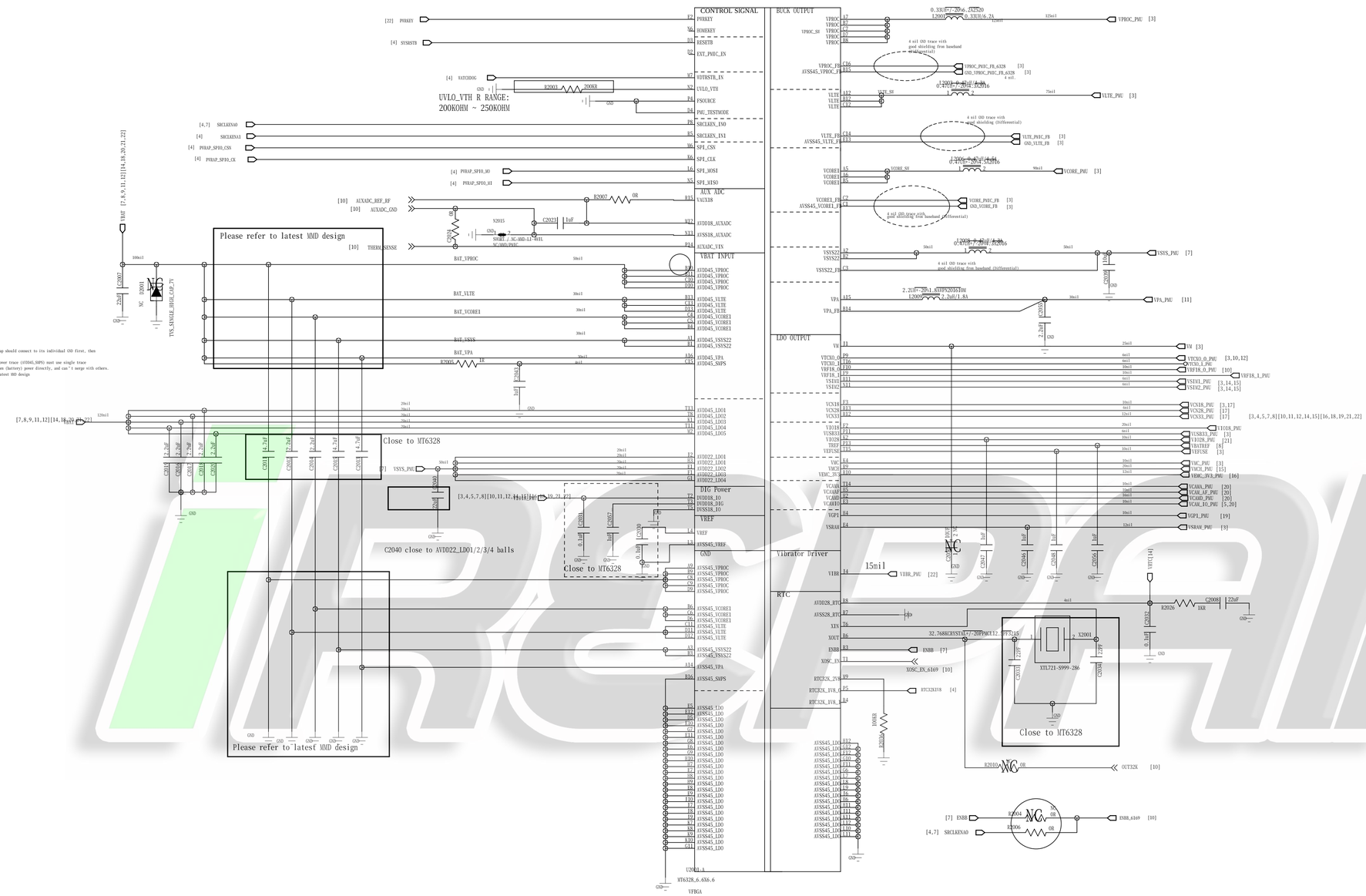

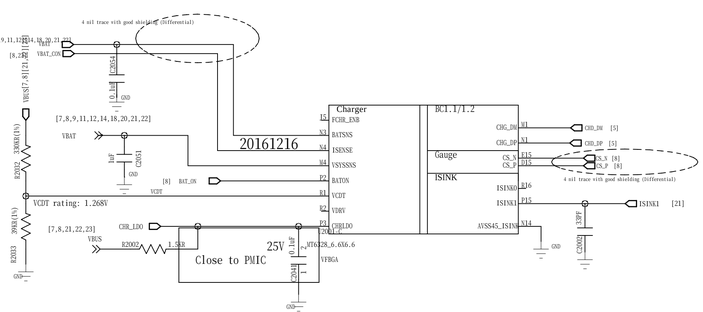

Audio

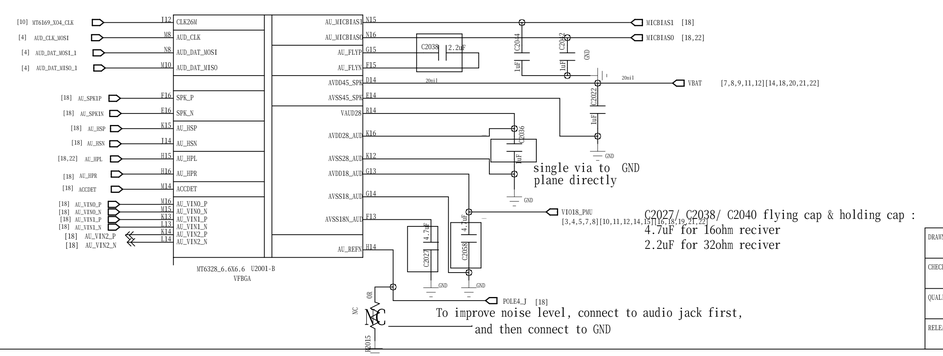

COMPANY:	WIND		
TITLE:	E187		
DRAWN: SUNHAO	DATED: 2016.01.21		
CHECKED:	DATED:	CODE:	SIZE: DRAWING NO: REV:
QUALITY CONTROL:	DATED:		
RELEASED:	DATED:	SCALE:	SHEET: 7 OF 23

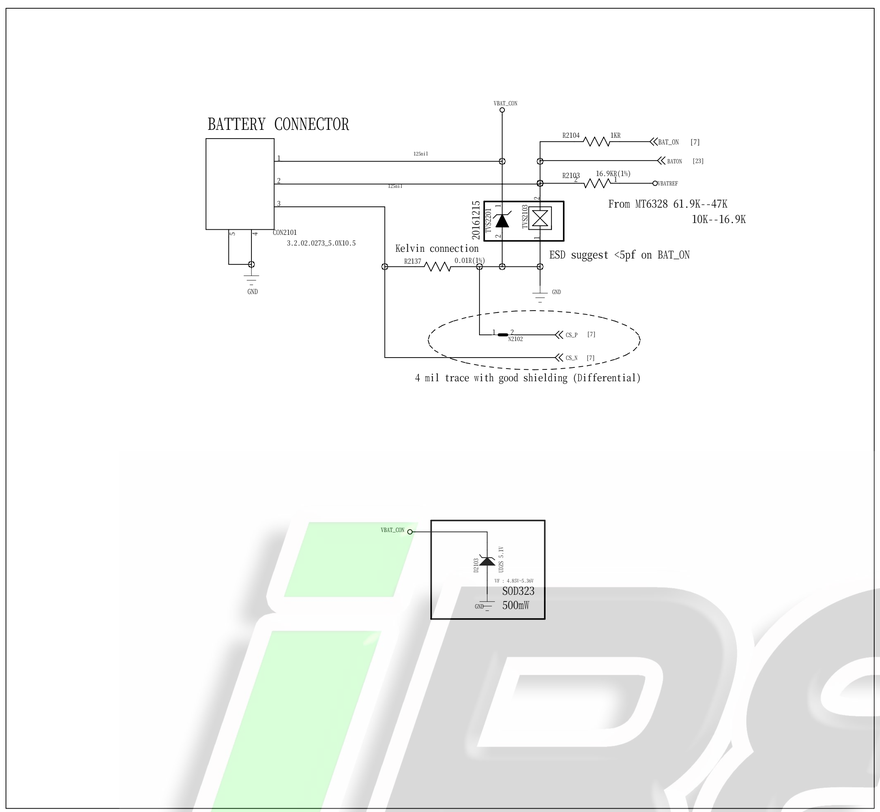

BQ24196/BQ24296 I2C address: 6BH (Write:, Read:)——已查

Switch Charger

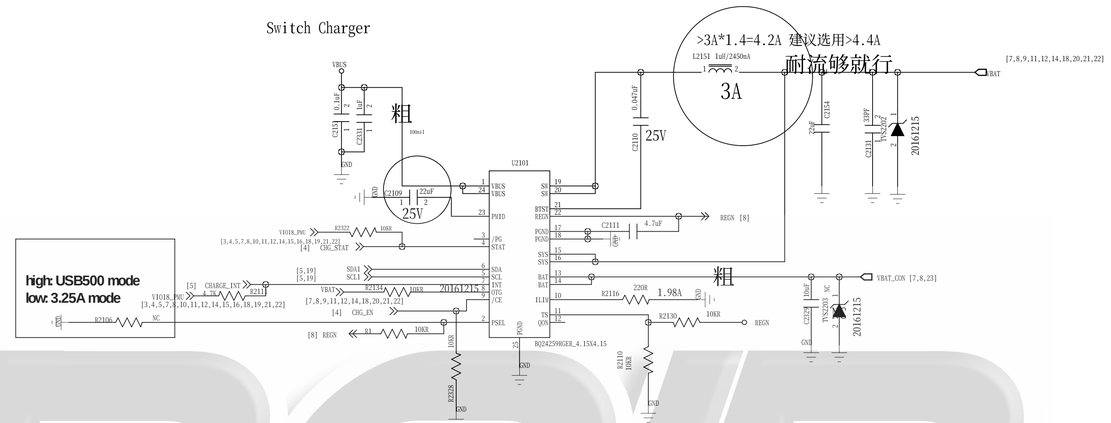

iRepair

REVISION RECORD			
LTR	ECO NO:	APPROVED:	DATE:

DRAWN: SUNHAO	DATED: 2016.01.21	COMPANY: WIND	
CHECKED:	DATED:	TITLE: E187	
QUALITY CONTROL:	DATED:	CODE: / SIZE: / DRAWING NO: / REV:	
RELEASED:	DATED:	SCALE:	SHEET: 8 OF 23

REVISION RECORD			
LTR	ECO NO:	APPROVED:	DATE:

Flash LED

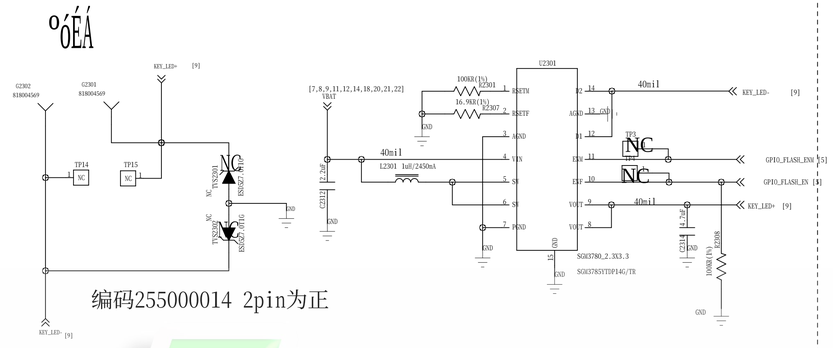

编码255000014 2pin为正

LCM Backlight LED Driver

X5R or X7R
Rated voltage >=50V

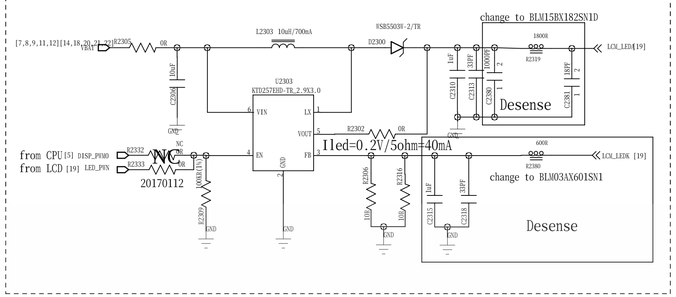

LCM Gate Driver I2C address: 0X3E (Write:0x7C, Read:0x7D)

Flash LED

20161208

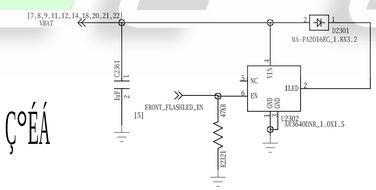

LCM Gate Drive

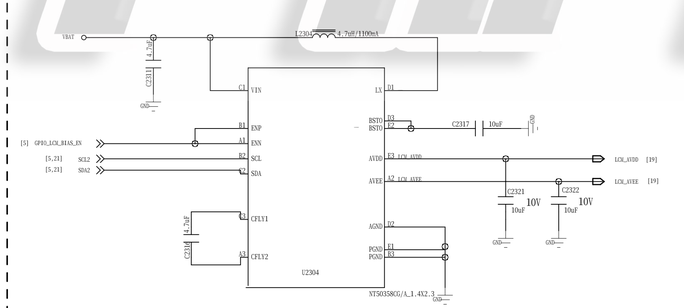

C2313/C2314 and C2317 are suggested to use 10uF for component de-rating consideration.

have checked

DRAWN: SUNHAO	DATED: 2016.01.21	COMPANY: WIND	
CHECKED:	DATED:	TITLE: E187	
QUALITY CONTROL:	DATED:	CODE: / SIZE: / DRAWING NO:	REV:
RELEASED: <Released By>	DATED: <Release Date>	SCALE: <Scale>	SHEET: 9 OF 23

Power trace	PCB line width	MAX current
VRF18_0_PMU	0.4mm	
VIO18_PMU	0.35mm	
VTCXO_0_PMU	0.2mm	

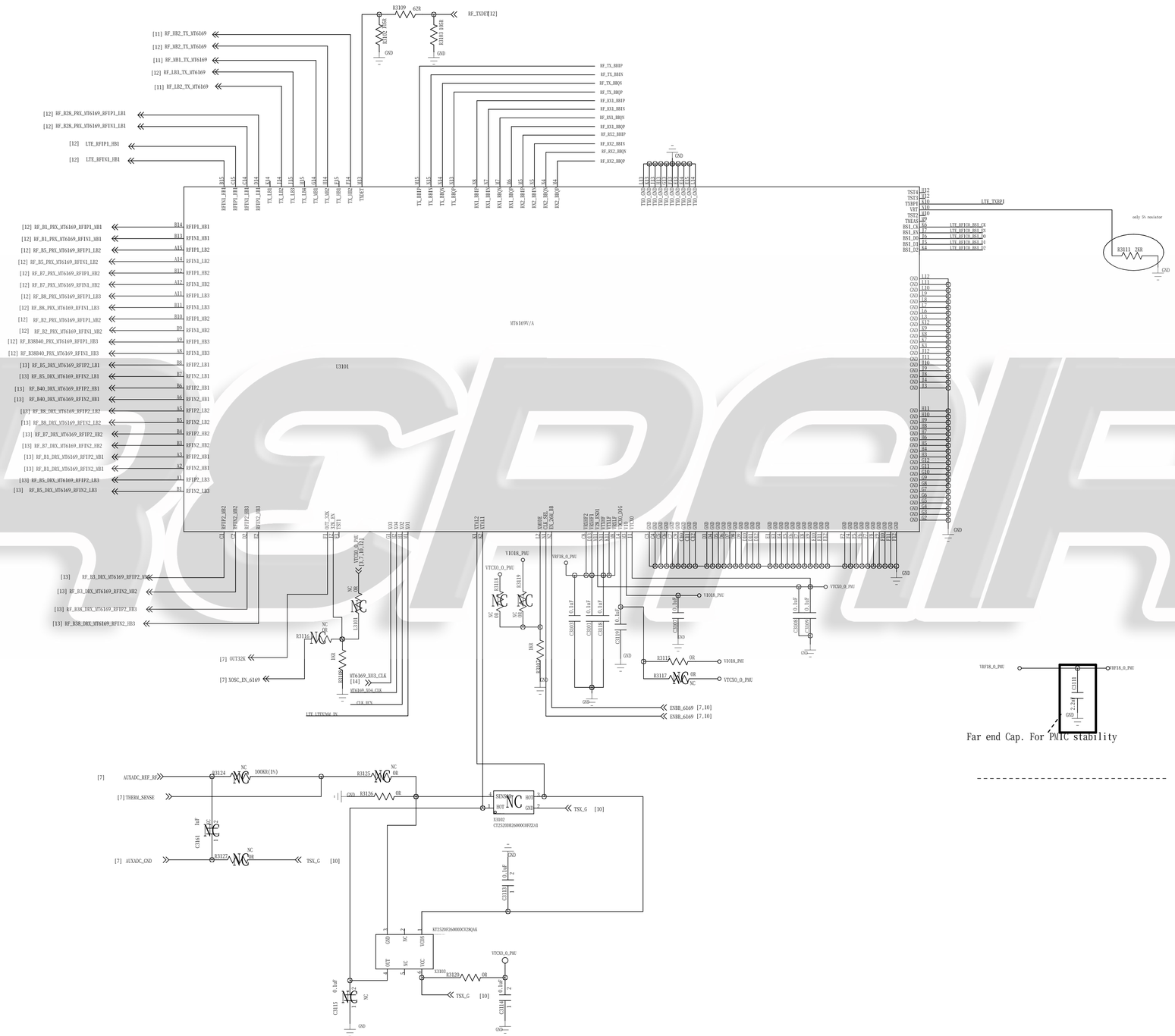

iRSPDVR

Title	31_RF_MT6169_PIN_OUT
Size D	Yude Confidential
Data April 5,2015	Sheet 31 of 99

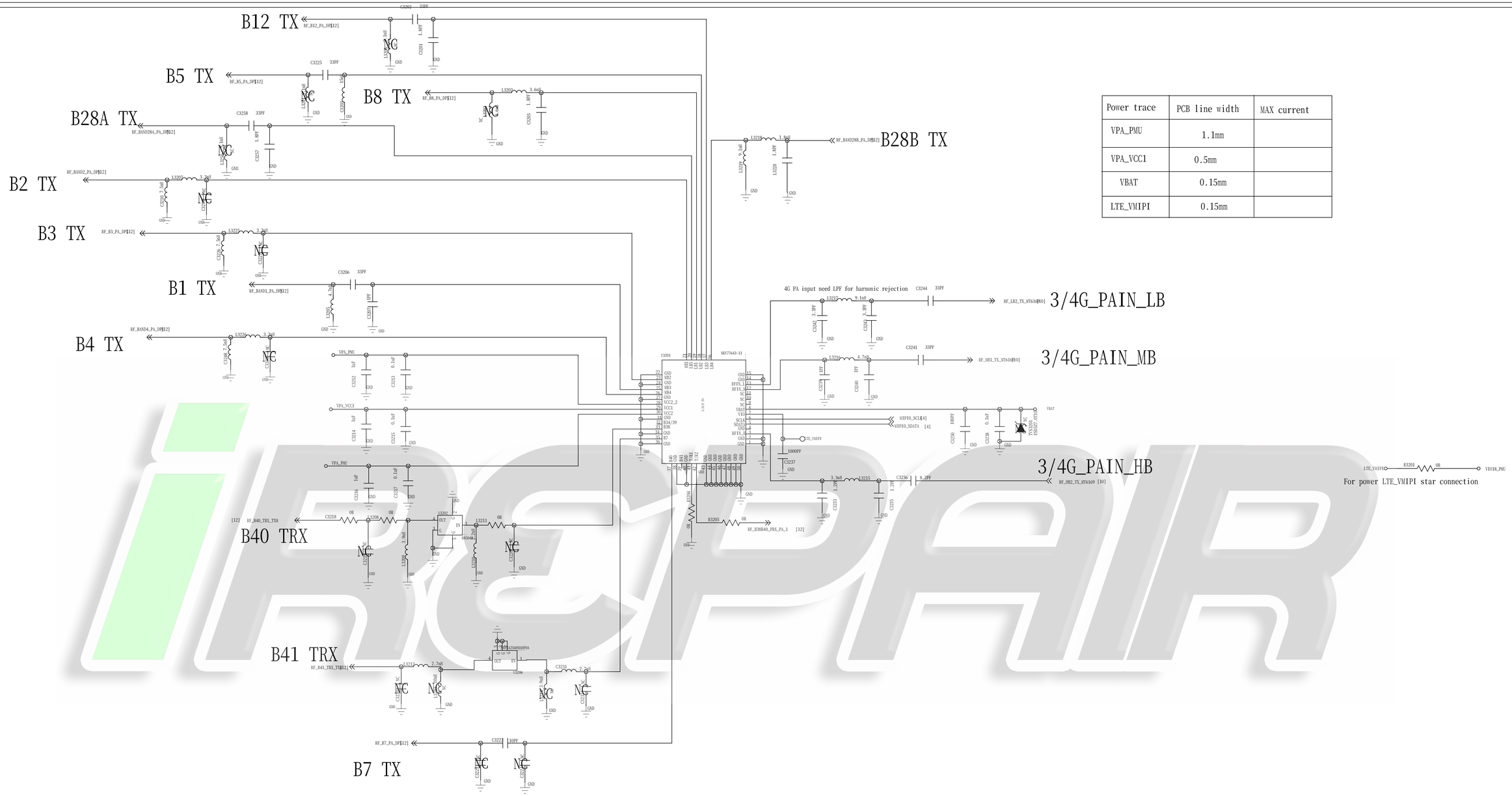

Power trace	PCB line width	MAX current
VPA_PMU	1.1mm	
VPA_VCC1	0.5mm	
VBAT	0.15mm	
LTE_VMIPI	0.15mm	

VPA_VCC1 and VPA PMU need to be connected after Cap

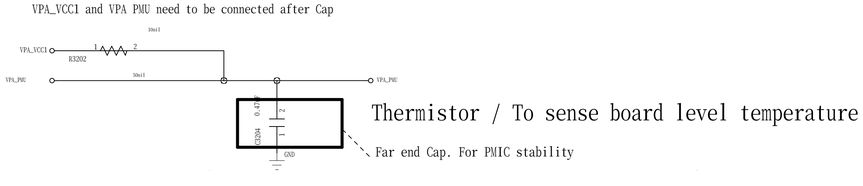

Title	32_RF_MT6169_RF_TX
Size D	Yude Confidential
Data April 5,2015	Sheet 32 of 99

Power trace	PCB line width	MAX current
VBAT	2.5mm (Min 2.0mm)	
LTE_VMIPI	0.15mm	

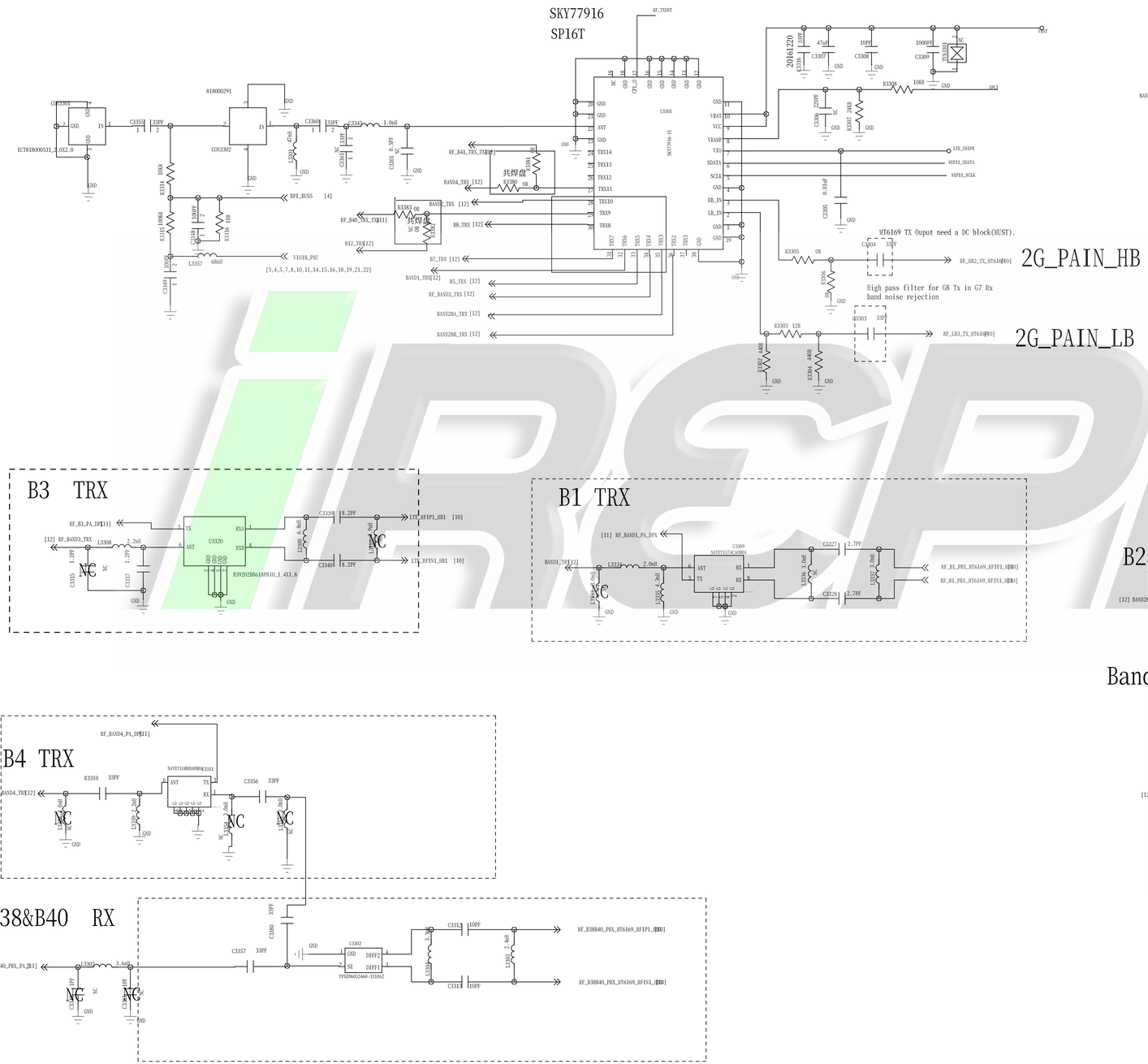

Title	33_RF_MT6169_RF_PRX
Size D	Yude Confidential
Data April 5,2015	Sheet 33 of 99

Power trace	PCB line width	MAX current
VTCXO2	0.15mm	50uA

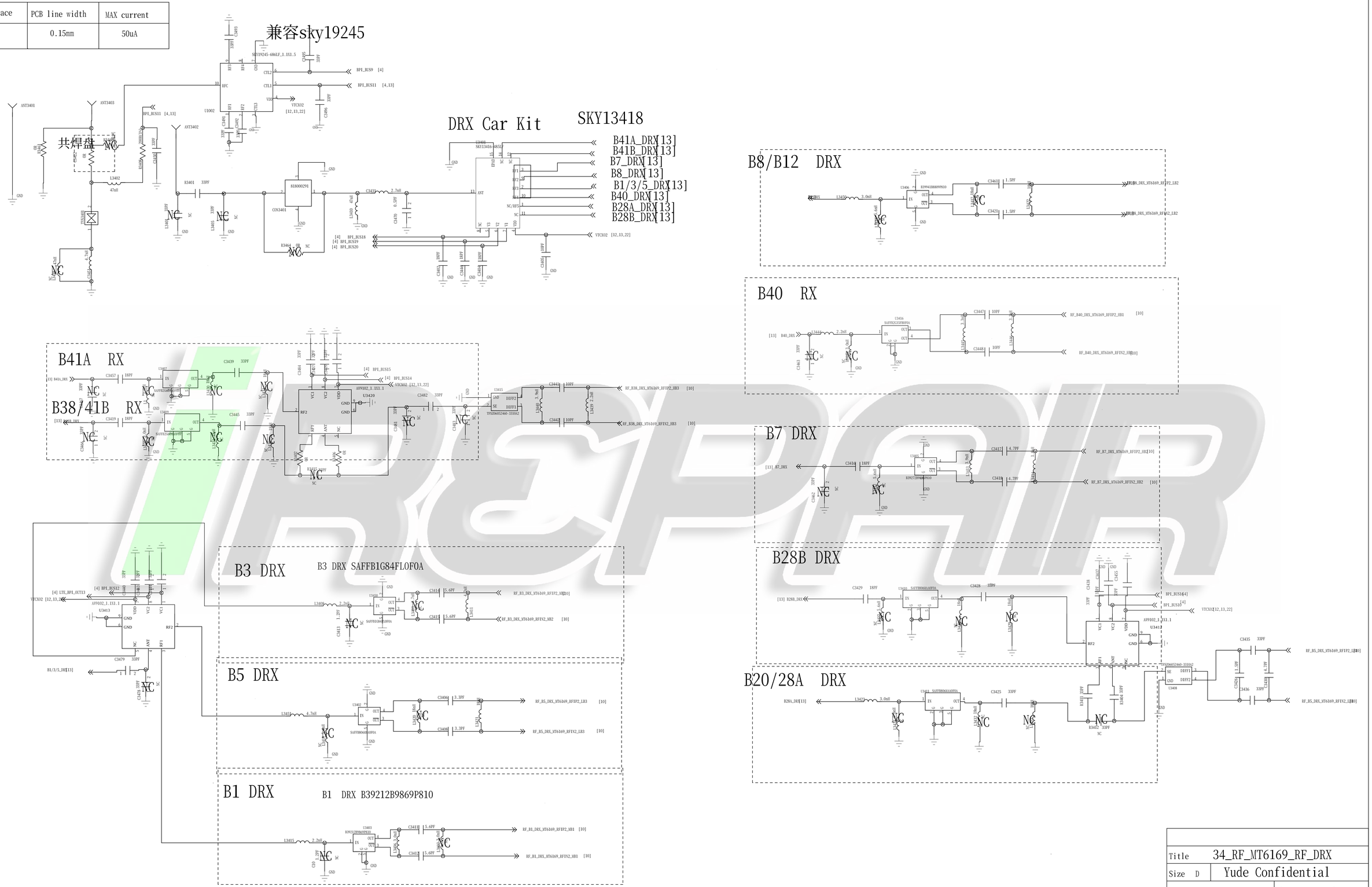

Title	34_RF_MT6169_RF_DRX
Size D	Yude Confidential
Data Nov 6,2015	Sheet 34 of 99

REVISION RECORD			
LTR	ECO NO:	APPROVED:	DATE:

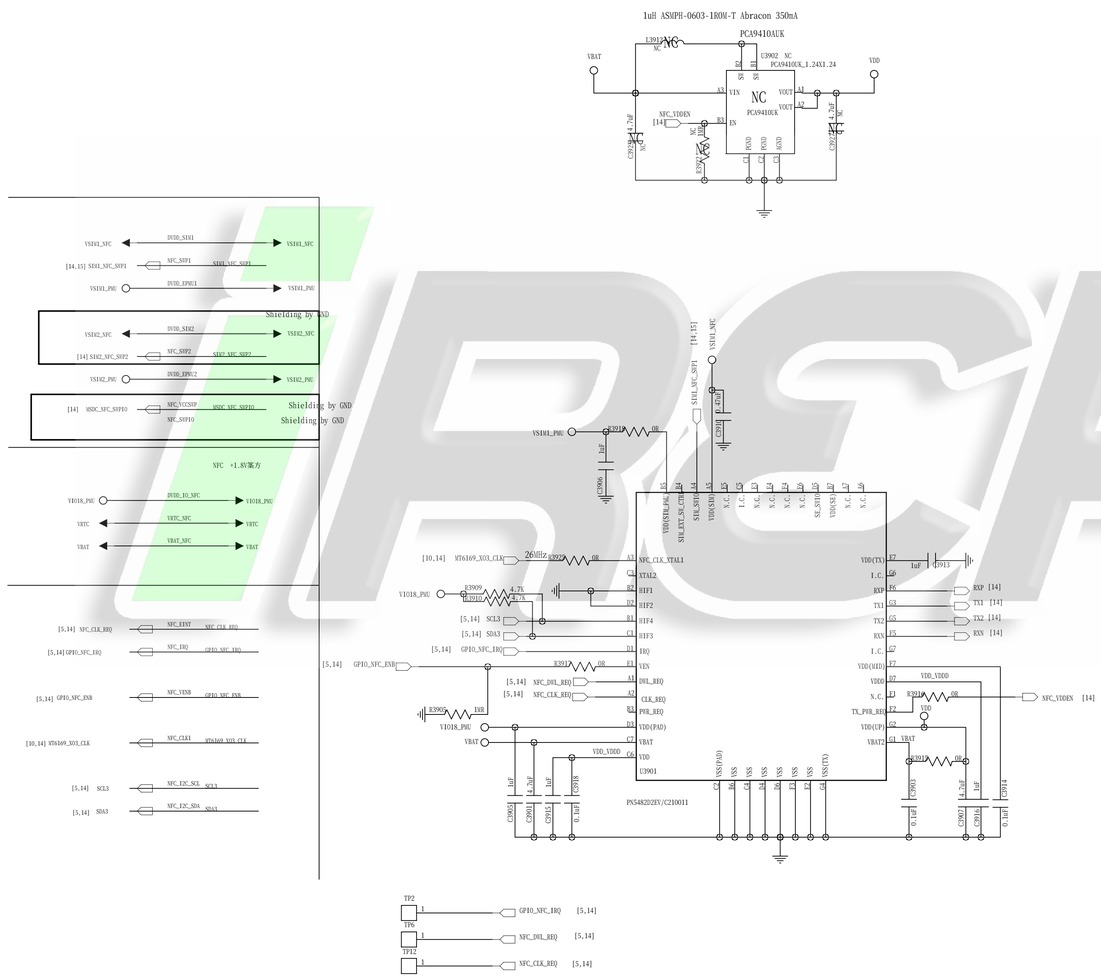

COMPANY: WIND			
TITLE: E187			
DRAWN: SUNHAO	DATED: 2016.01.21		
CHECKED: SUNHAO	DATED: <Checked Date>	CODE: <Code>	SIZE: D
QUALITY CONTROL: <QC By>	DATED: <QC Date>	DRAWING NO: <Drawing Number>	REV: <Revision>
RELEASED: <Released By>	DATED: <Release Date>	SCALE: <Scale>	SHEET: 14# 23

REPAIR

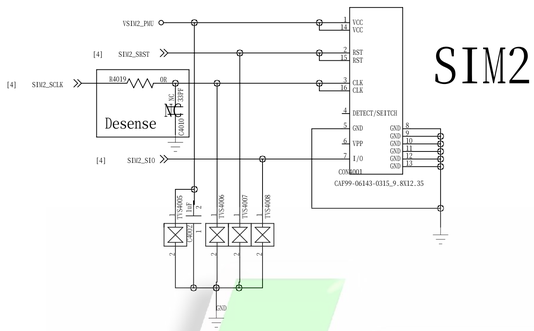

SIM2

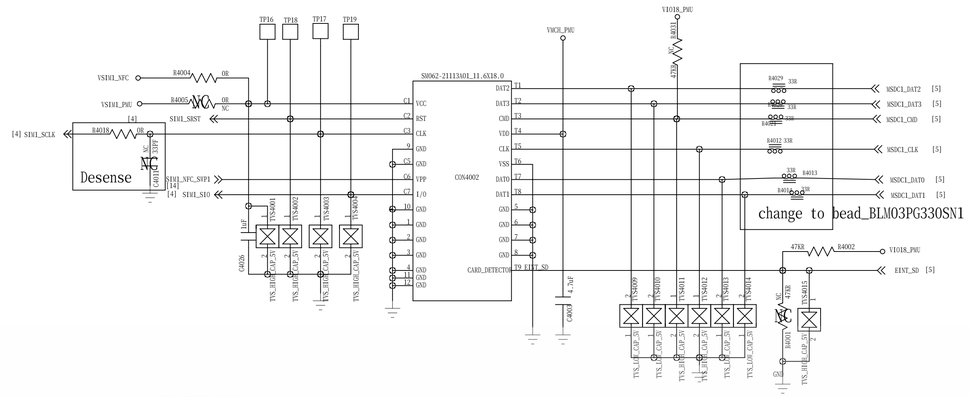

SIM1

TF CARD

iREPAIR

Schematic design notice of "40_MEMORY_SD Card" page.

Note 40-1:
The total equivalent capacitance of MSDC ESD protection device and de-sense bypass CAP must be <=10pF.

But for NFC app. equivalent capacitance of MSDC_NFC_SWPIO and MSDC_NFC_VCCSWP should <=0.5pF.

have checked

DRAWN: SUNHAO	DATED: 2016.01.21	COMPANY: WIND	
CHECKED: SUNHAO	DATED: <Checked Date>	TITLE: E187	
QUALITY CONTROL: <QC By>	DATED: <QC Date>	CODE: <Code>	SIZE: D
RELEASED: <Released By>	DATED: <Release Date>	DRAWING NO: <Drawing Number>	REV: <Revision>
		SCALE: <Scale>	SHEET: 15 OF 23

REVISION RECORD			
LTR	ECO NO:	APPROVED:	DATE:

Connect to AP

DQ[0..31]	DQ[0..31]
CA[0..9]	CA[0..9]
CS0_N	CS0_N
CS1_N	CS1_N
CKE	CKE
DQM0	DQM0
DQM1	DQM1
DQM2	DQM2
DQM3	DQM3
DQS0_C	DQS0_C
DQS1_C	DQS1_C
DQS2_C	DQS2_C
DQS3_C	DQS3_C
DQS0_T	DQS0_T
DQS1_T	DQS1_T
DQS2_T	DQS2_T
DQS3_T	DQS3_T
CLK0_T	CLK0_T
CLK0_C	CLK0_C
VREF_CA	VREF_CA
VREF_DQ	VREF_DQ
MSDC0_RSTB	MSDC0_RSTB
MSDC0_CMD	MSDC0_CMD
MSDC0_CLK	MSDC0_CLK
MSDC0_DSL	MSDC0_DSL
MSDC0_DAT0	MSDC0_DAT0
MSDC0_DAT1	MSDC0_DAT1
MSDC0_DAT2	MSDC0_DAT2
MSDC0_DAT3	MSDC0_DAT3
MSDC0_DAT4	MSDC0_DAT4
MSDC0_DAT5	MSDC0_DAT5
MSDC0_DAT6	MSDC0_DAT6
MSDC0_DAT7	MSDC0_DAT7

Power I/F

VIO18_PMU	VIO18_PMU
VEMC_3V3_PMU	VEMC_3V3_PMU
DVDD12_EMI	DVDD12_EMI

eMMC+LPDDR3

221 Ball, 0.5mm pitch

VDD1=1.8V
VDD2=1.20V
VDDCA=1.2V
VDDQ= 1.20V

8GB eMMC + 8Gb LPDDR3
Hynix/H9TQ64A8GTMCUR-KUM

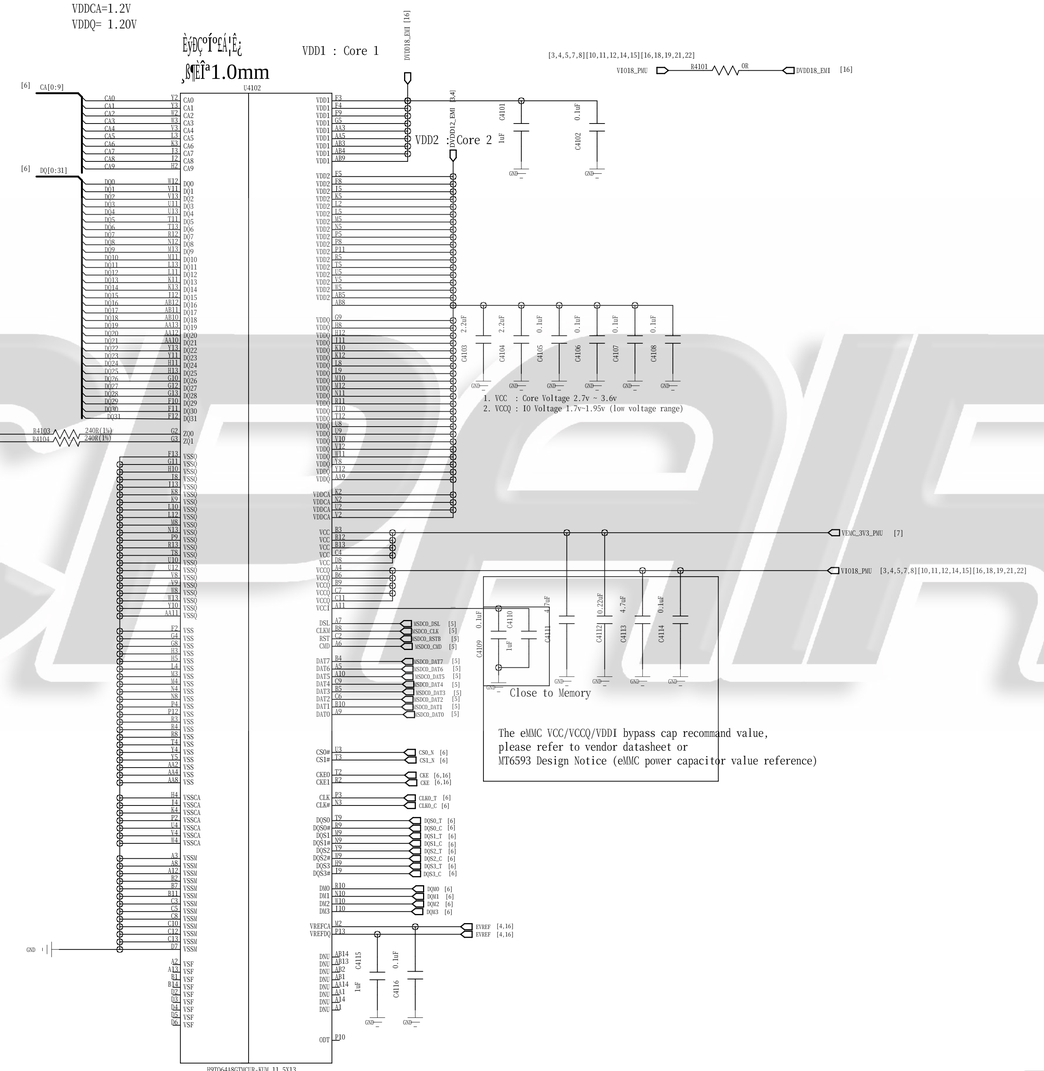

DRAWN: SUNHAO	DATED: 2016.01.21	COMPANY: WIND	
CHECKED: SUNHAO	DATED: <Checked Date>	TITLE: E187	
QUALITY CONTROL: <QC By>	DATED: <QC Date>	CODE: <Code>	SIZE: D
RELEASED: <Released By>	DATED: <Release Date>	DRAWING NO: <Drawing Number>	REV: <Revision>
		SCALE: <Scale>	SHEET: 16 of 23

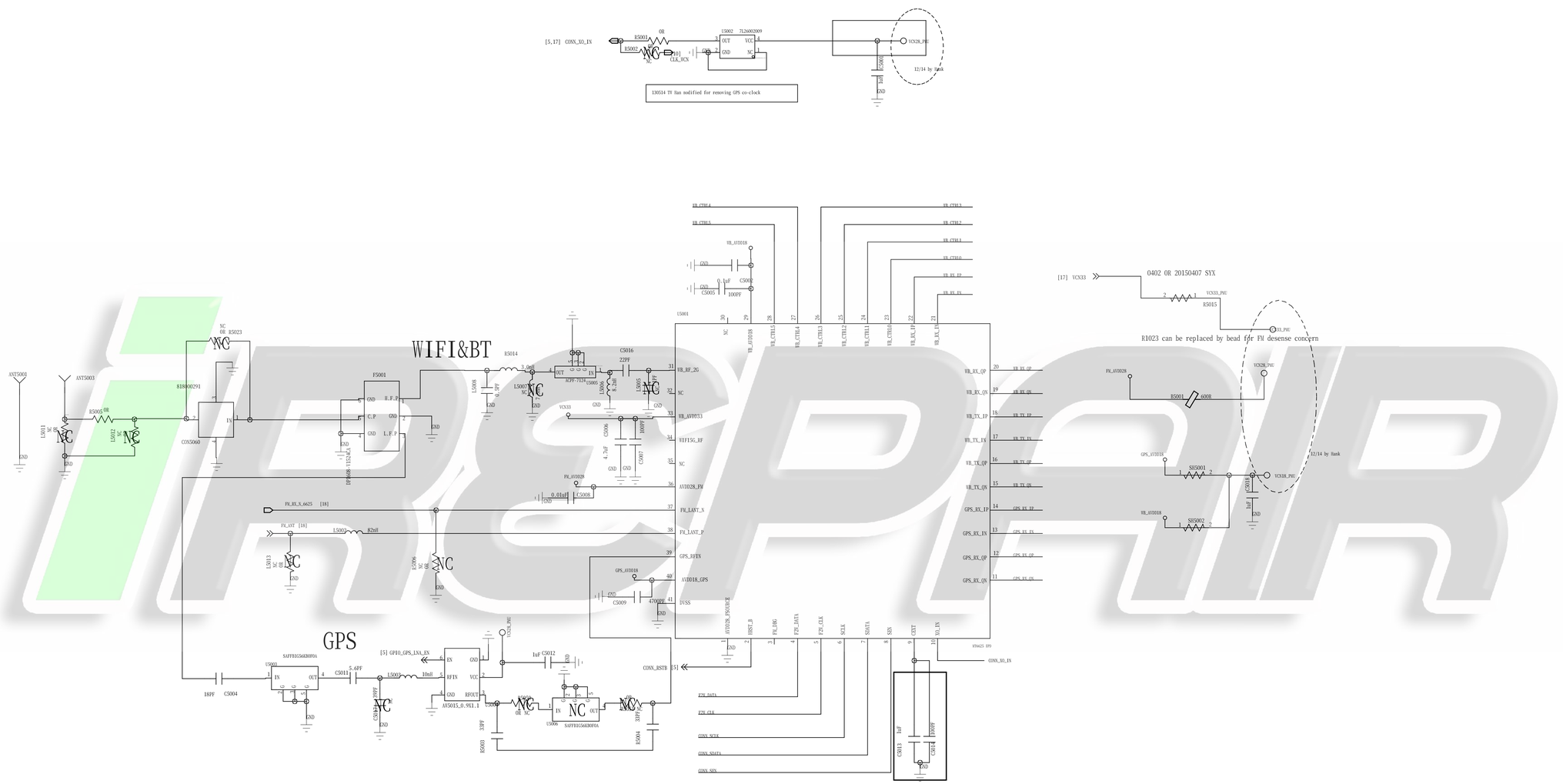

Title	09 MT6625L
Size 0	MTK Confidential
Date:	Monday, November 10, 2014 Sheet 38 of 99

REVISION RECORD			
LTR	ECO NO:	APPROVED:	DATE:

Speaker

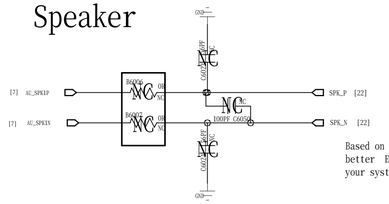

Based on your system level design , if better ESD performance is needed on your system.

Based on your system level design , if better desense performance is needed on your system.

Handset Microphone 1

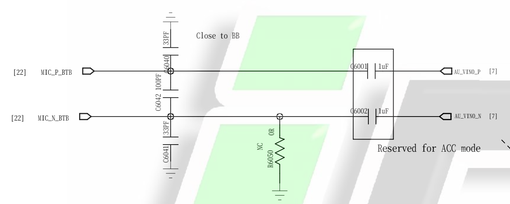

Based on your system level design, if better audio performance is needed on your system, please reserve for ACC mode

Earphone Audio

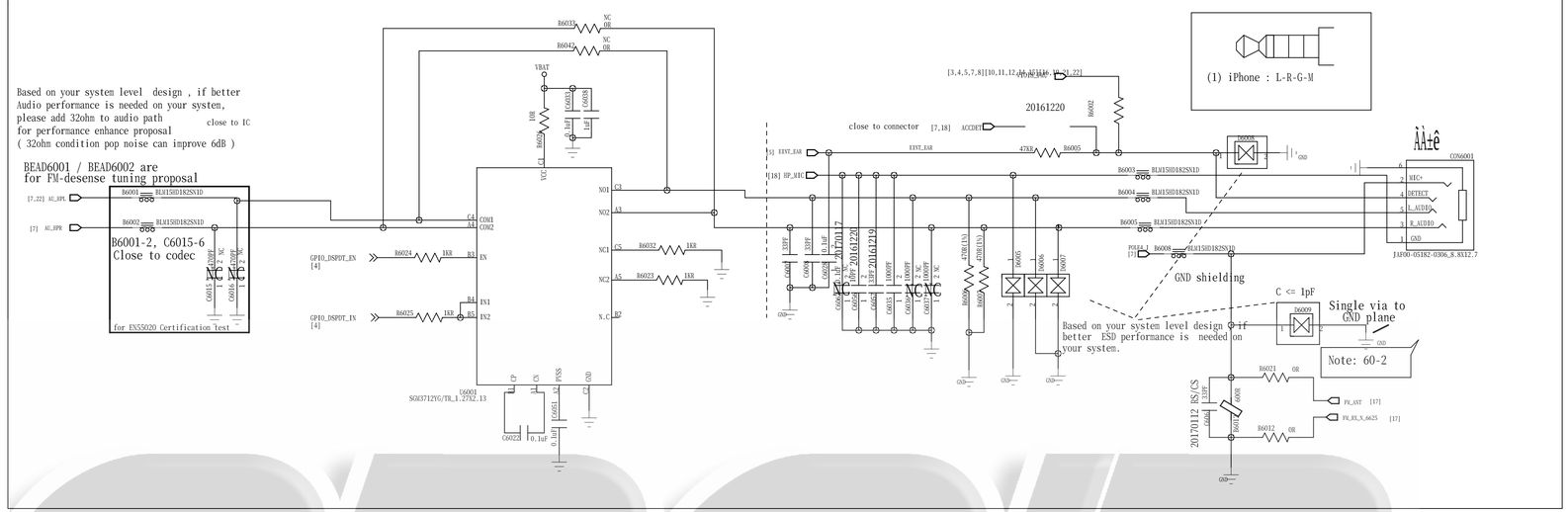

Earphone MICPHONE

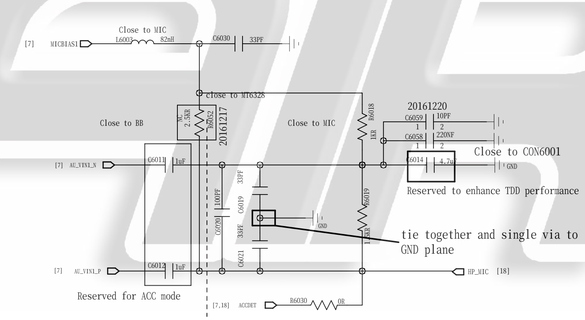

Receiver

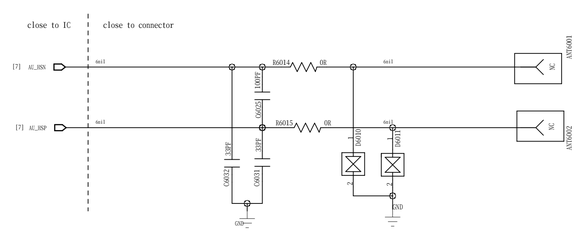

Based on your system level design , if better ESD performance is needed on your system.

Second MIC

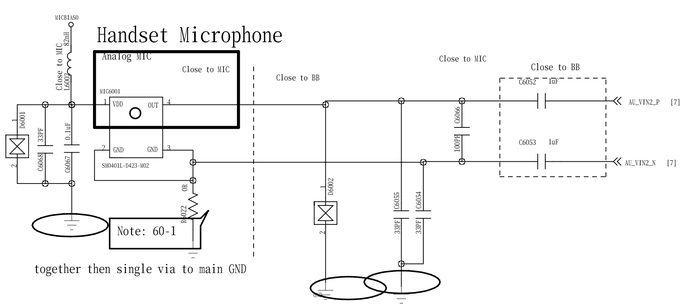

DRAWN: SUNHAO	DATED: 2016.01.21	COMPANY: WIND	
CHECKED: SUNHAO	DATED: <Checked Date>	TITLE: E187	
QUALITY CONTROL: <QC By>	DATED: <QC Date>	CODE: <Code>	SIZE: D
RELEASED: <Released By>	DATED: <Release Date>	DRAWING NO: <Drawing Number>	REV: <Revision>
		SCALE: <Scale>	SHEET: 18 OF 23

REPAIR

REVISION RECORD			
LTR	ECO NO:	APPROVED:	DATE:

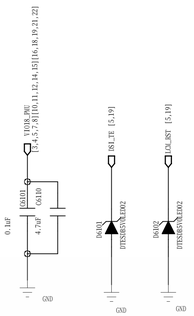

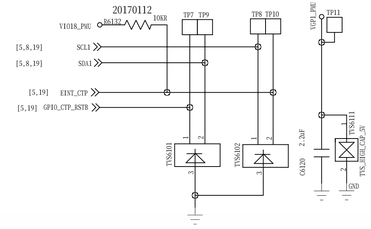

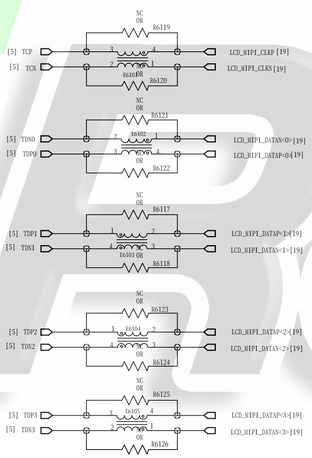

MIPI LCD:5" HD

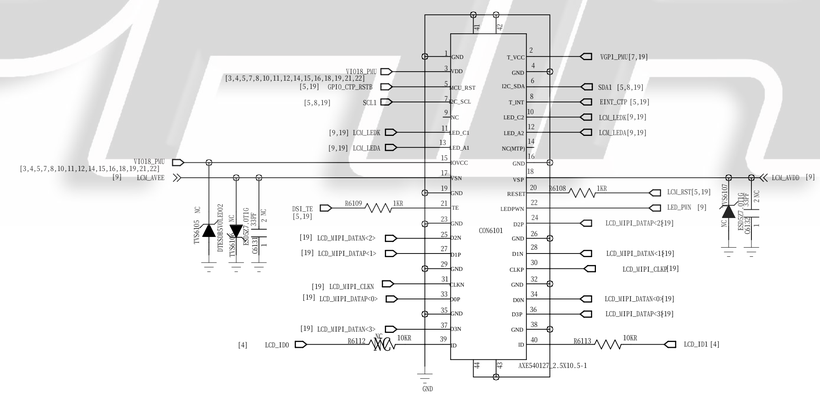

iREPAIR

COMPANY: WIND			
TITLE: E187			
DRAWN: SUNHAO	DATED: 2016.01.21		
CHECKED: SUNHAO	DATED: <Checked Date>	CODE: <Code>	SIZE: D
QUALITY CONTROL: <QC By>	DATED: <QC Date>	DRAWING NO: <Drawing Number>	REV: <Revision>
RELEASED: <Released By>	DATED: <Release Date>	SCALE: <Scale>	SHEET: 19 OF 23

REVISION RECORD			
LTR	ECO NO:	APPROVED:	DATE:

MAIN_CAMERA

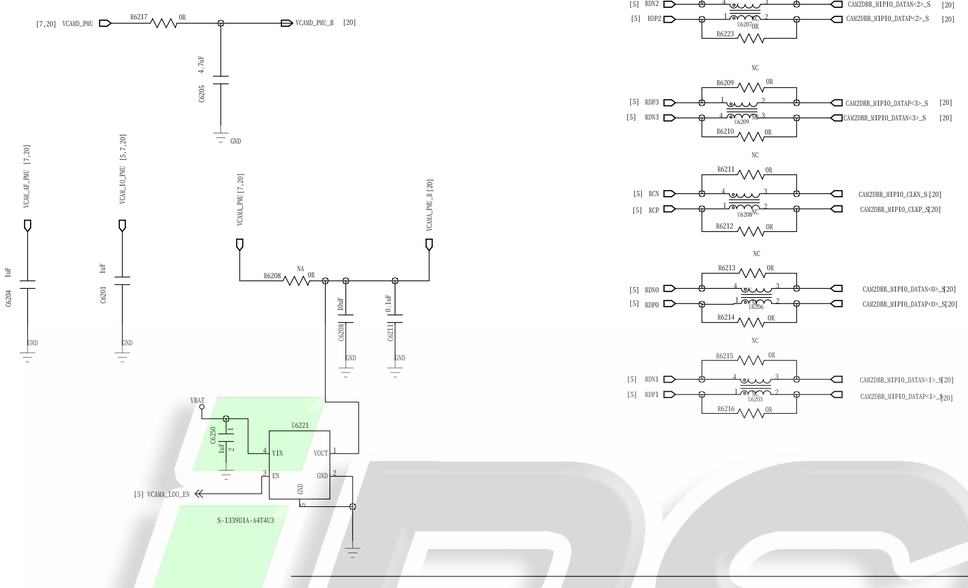

MAIN_CAMERA

MMZ0603f100C

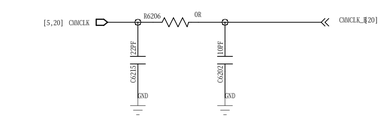

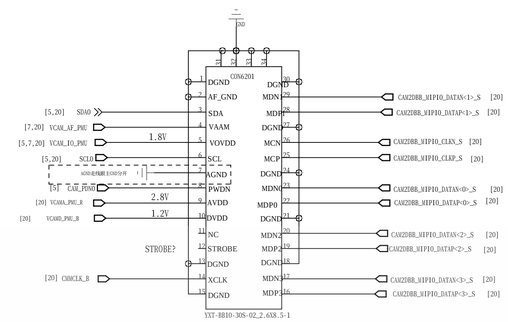

SUB_CAMERA

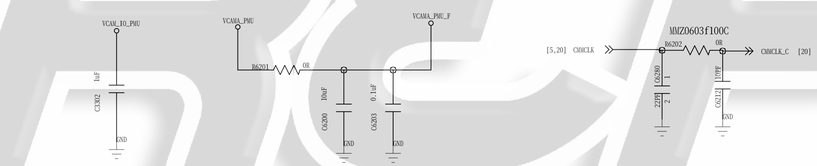

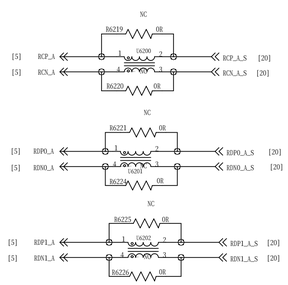

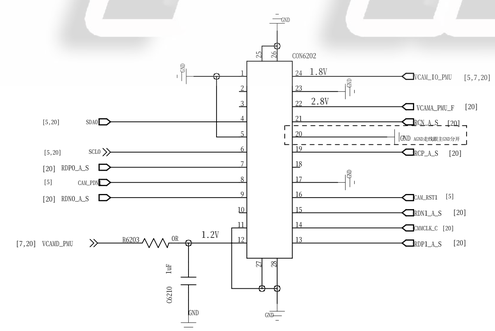

IREPAIR

have checked

COMPANY:	WIND		
TITLE:	E187		
DRAWN: SUNHAO	DATED: 2016.01.21		
CHECKED: SUNHAO	DATED: <Checked Date>		
QUALITY CONTROL: <QC By>	DATED: <QC Date>		
RELEASED: <Released By>	DATED: <Release Date>		
CODE: <Code>	SIZE: D	DRAWING NO: <Drawing Number>	REV: <Revision>
SCALE: <Scale>		SHEET: 20 OF 23	

REVISION RECORD			
LTR	ECO NO:	APPROVED:	DATE:

G Sensor-3X

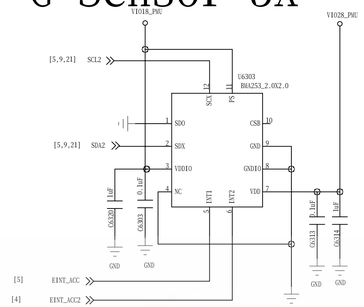

Ambient Light Sensor with Proximity Sensor

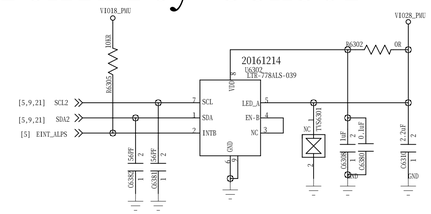

SAR Sensor

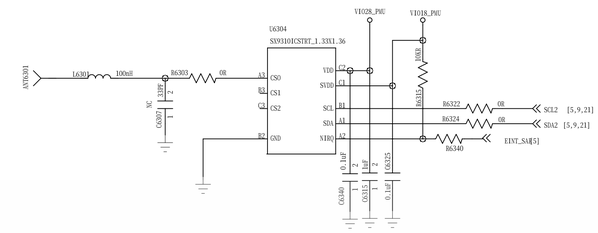

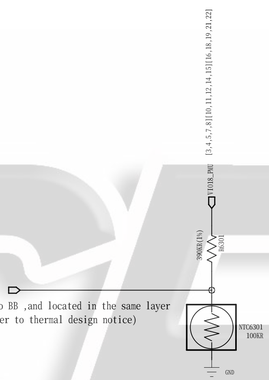

Thermistor / To sense board level temperature

INDICATOR LIGHT

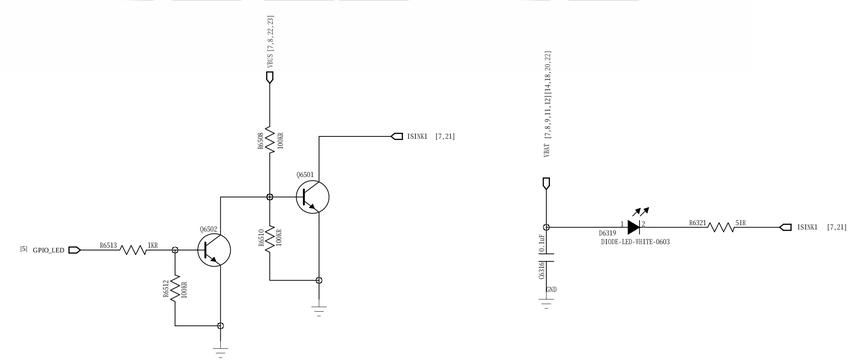

COMPANY: WIND			
TITLE: E187			
DRAWN: SUNHAO	DATED: 2016.01.21		
CHECKED: SUNHAO	DATED: <Checked Date>	CODE: <Code>	SIZE: D	DRAWING NO: <Drawing Number>	REV: <Revision>
QUALITY CONTROL: <QC By>	DATED: <QC Date>		
RELEASED: <Released By>	DATED: <Release Date>	SCALE: <Scale>	SHEET: 21# 23

have checked

IRepair

REVISION RECORD			
LTR	ECO NO:	APPROVED:	DATE:

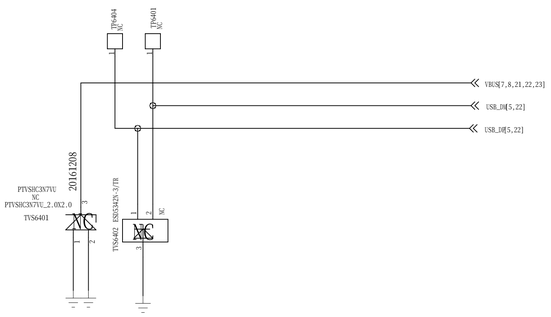

side key

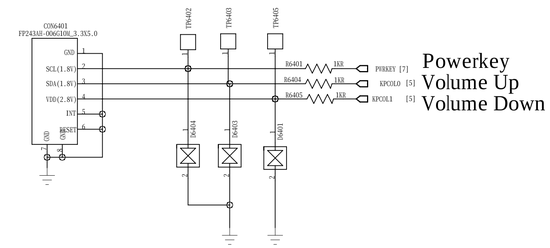

SGM2036-3.3YUDH4G/TR
NCP114AMX330TCG

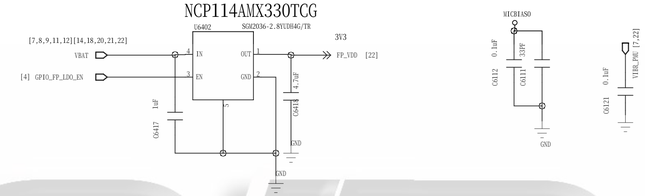

Speaker

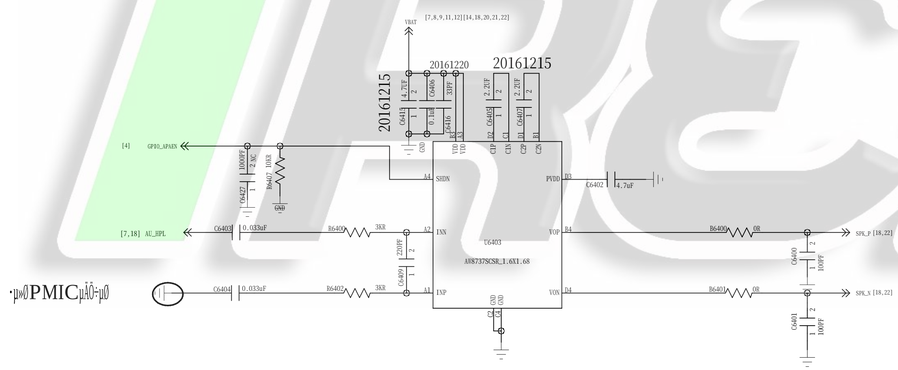

Fingerprint

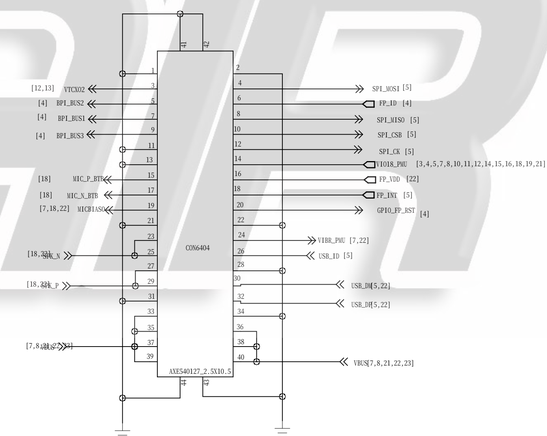

IREPAIR

COMPANY: WIND				
TITLE: E187				
DRAWN: SUNHAO	DATED: 2016.01.21	CODE: <Code>	SIZE: D	DRAWING NO: <Drawing Number> REV: <Revision>
CHECKED: SUNHAO	DATED: <Checked Date>			
QUALITY CONTROL: <QC By>	DATED: <QC Date>			
RELEASED: <Released By>	DATED: <Release Date>	SCALE: <Scale>	SHEET: 22# 23	

REVISION RECORD			
LTR	ECO NO:	APPROVED:	DATE:

UART只是测试不按照生产要求
开关机键电源键，USB按照生产要求摆放2.5mm

BOT面电池盖接地弹片，中间两个天线要求兼容OR到地。

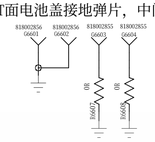

TOP面前壳耳机旁边和两边的接地弹片

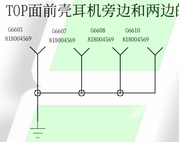

BOT面二合一卡座旁边的接地弹片

TEST POINTS

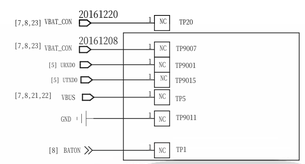

NC

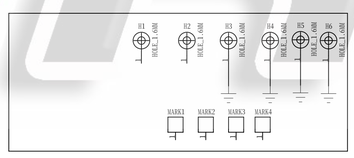

NC

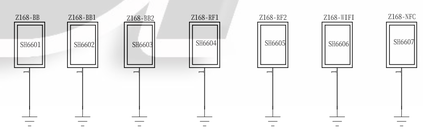

REPAIR

have checked

DRAWN: SUNHAO	DATED: 2016.01.21	COMPANY: WIND	
CHECKED: SUNHAO	DATED: <Checked Date>	TITLE: E187	
QUALITY CONTROL: <QC By>	DATED: <QC Date>	CODE: <Code> / SIZE: D	DRAWING NO: <Drawing Number> / REV: <Revision>
RELEASED: <Released By>	DATED: <Release Date>	SCALE: <Scale>	SHEET: 23# 23